Calavera del Musico

The idea of this product comes from the Mexican tradition of making sugar skulls to honor the dead on the Dia de los Muertos holiday. They signify the cycle of life and death and the importance of remembering the dead. Typically, these are made for ofrendas, which are essentially an altar to honor the spirits of deceased loved ones. This product is unique because it also combines other aspects of Mexican culture, specifically, the music and the vegetation. The top of the skull features part of a mariachi sombrero, which is an important symbol in Mexican culture as it represents pride and heritage, and it is a common part of mariachi bands' uniforms. The top of the skull is also hollow in the center to allow a small succulent to be planted to appear as the top of a sombrero. With sombreros having floral patterns, the native succulent plant works flawlessly as both a decorative piece and a symbol of important Mexican vegetation. After visiting Mexico almost every year, I have come to love the music of mariachi bands, so it was very important for me to incorporate that into the design. I also loved seeing the abundance of different types of succulents in the rural parts where my family lived. I used the UnTiED ideation method of Absurdity in the first step of ideation by combining vastly different parts of my culture and trying to make them work with each other. Rather than creating a typical pot for a plant to be placed in, I used these absurd ideas to create a new, unique product. I also sought random connections with the opening mouth and how it may also be used as a light source. The design heuristic cards used include 39 (incorporate environment) and 40 (incorporate user input). 39 is incorporated in the fact that the skull itself is used as a pot for plants, and 40 also inspired me to include a succulent in the first place, as you have to maintain the plant by giving it water and sunlight. Alongside this, 67 (unify) encouraged me to combine what were originally two separate ideas into one skull with he hat and plant. While the entire thing is generally symmetrical on both sides of the face, one of the eyes has a flower while the other is empty to signify the hollowness and also rebirth that can come from death. The patterns are also added to represent classic designs used in sugar skulls.

Thumbnail Sketches

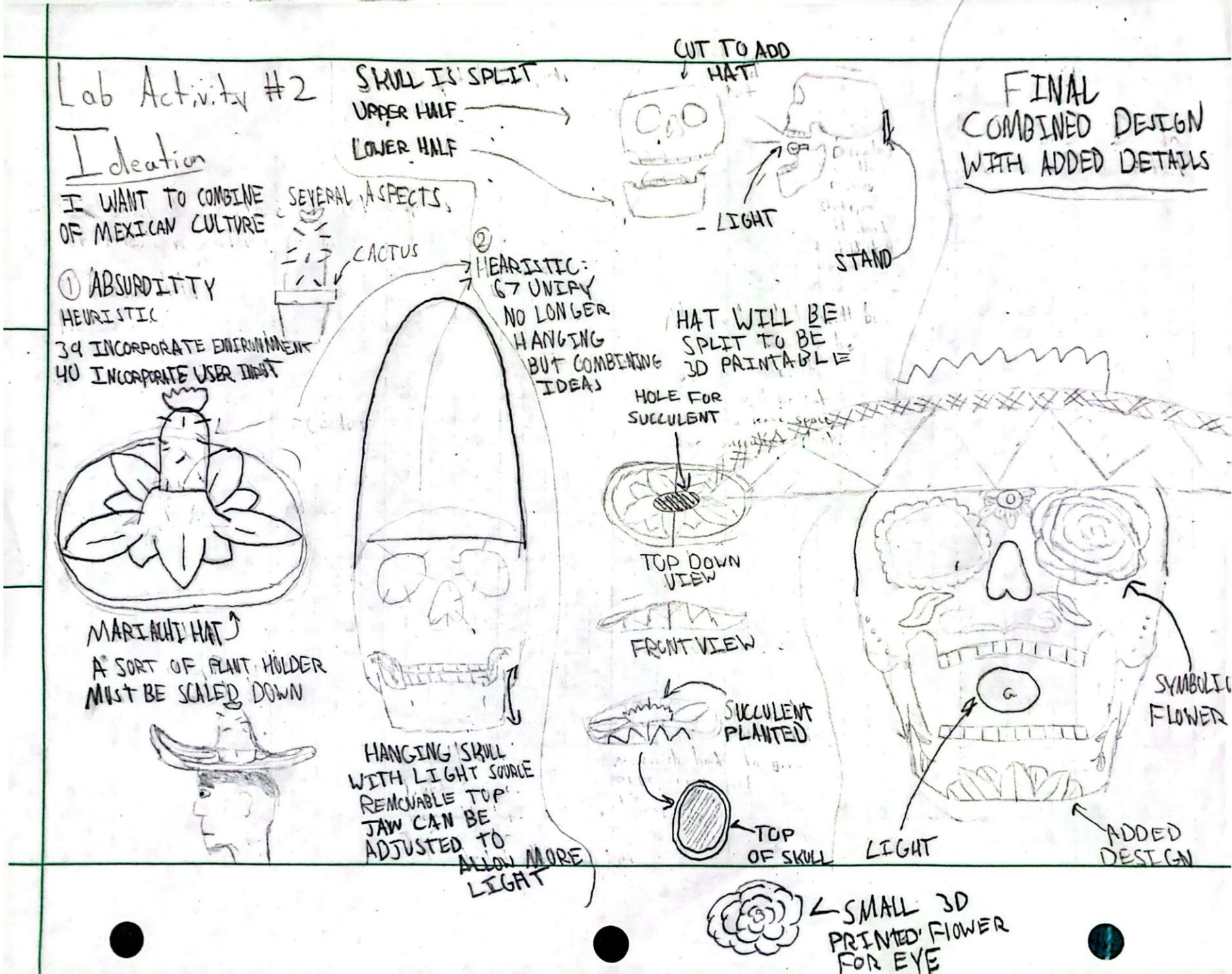

Perspective Sketch

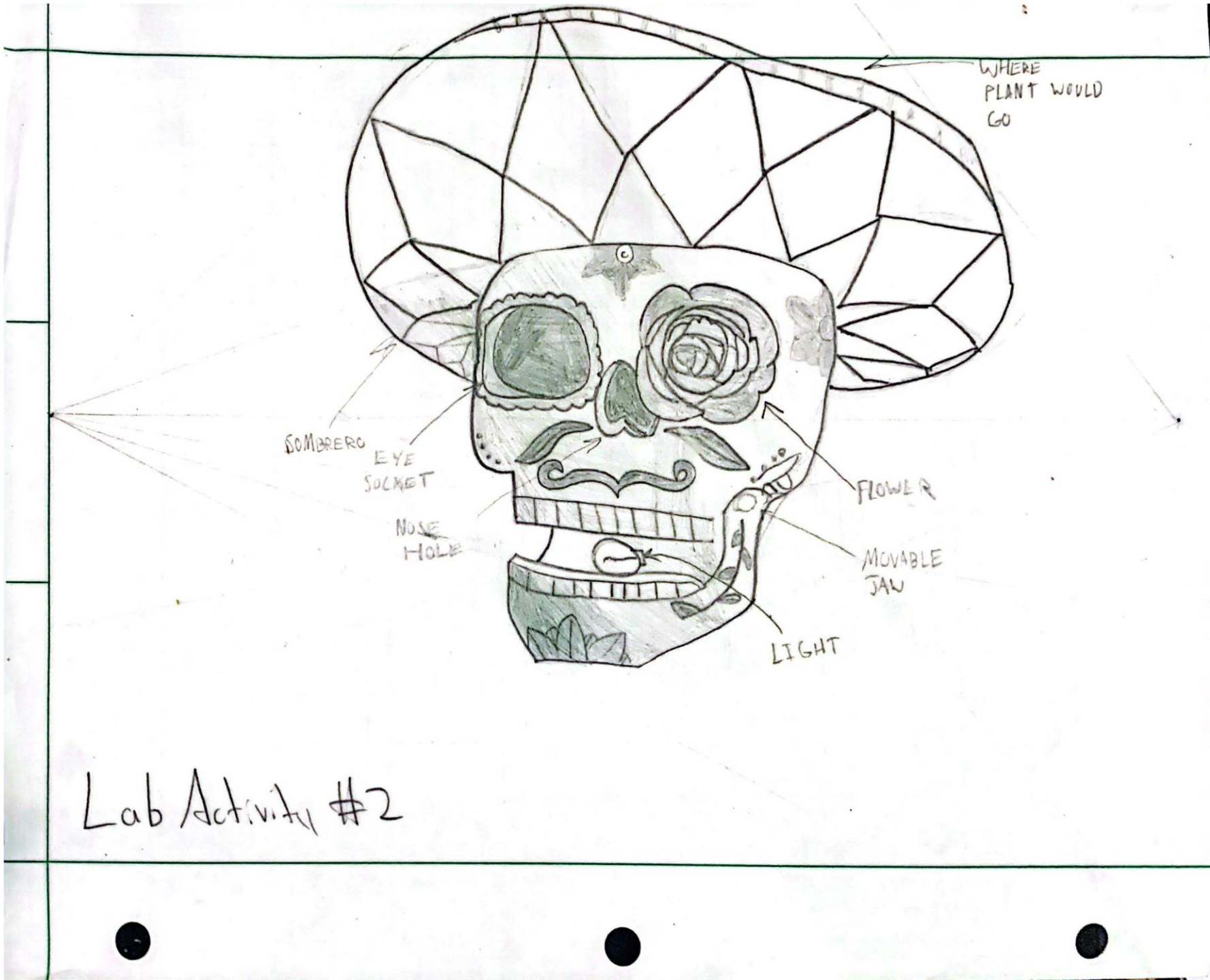

Multi-view Sketches

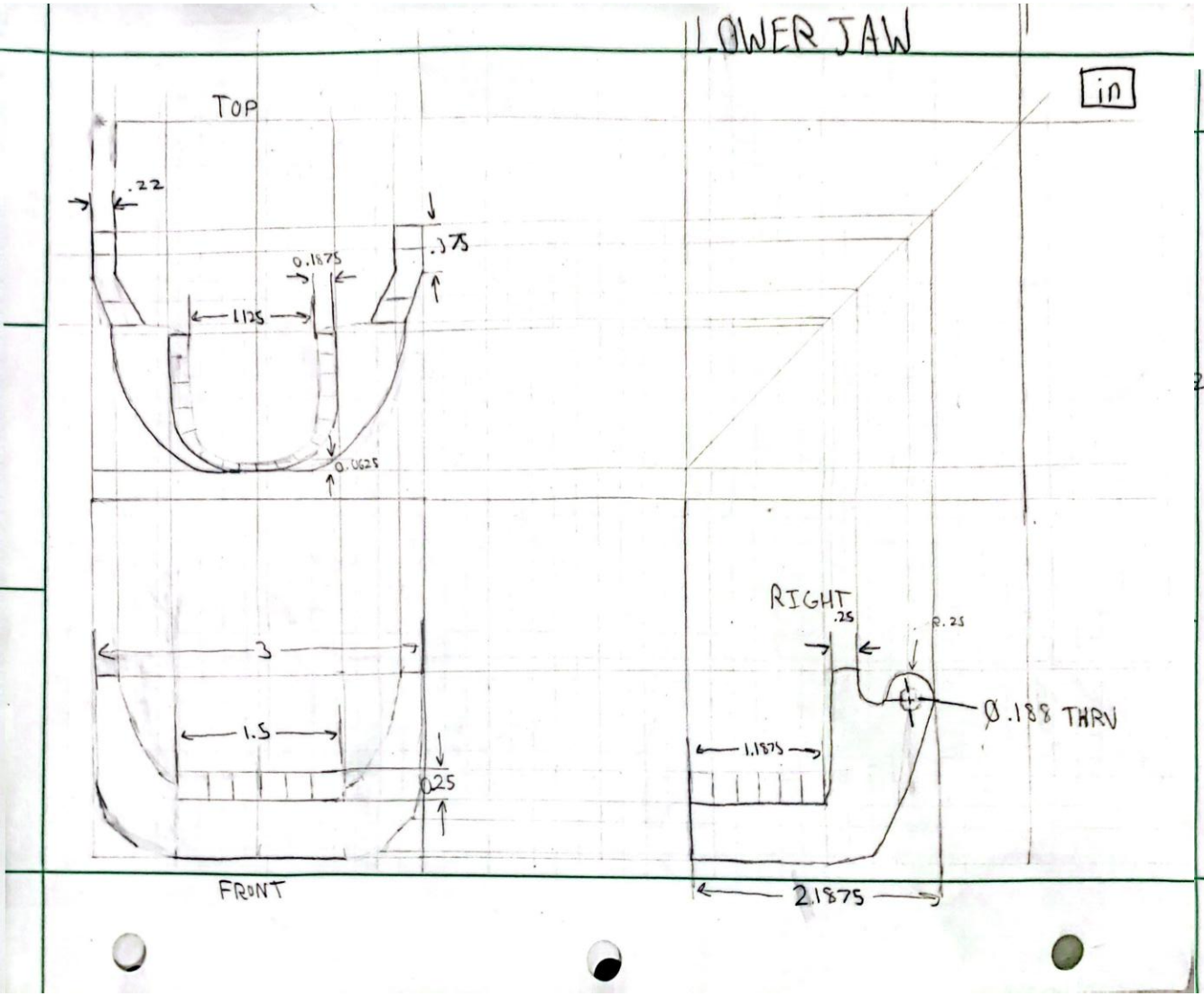

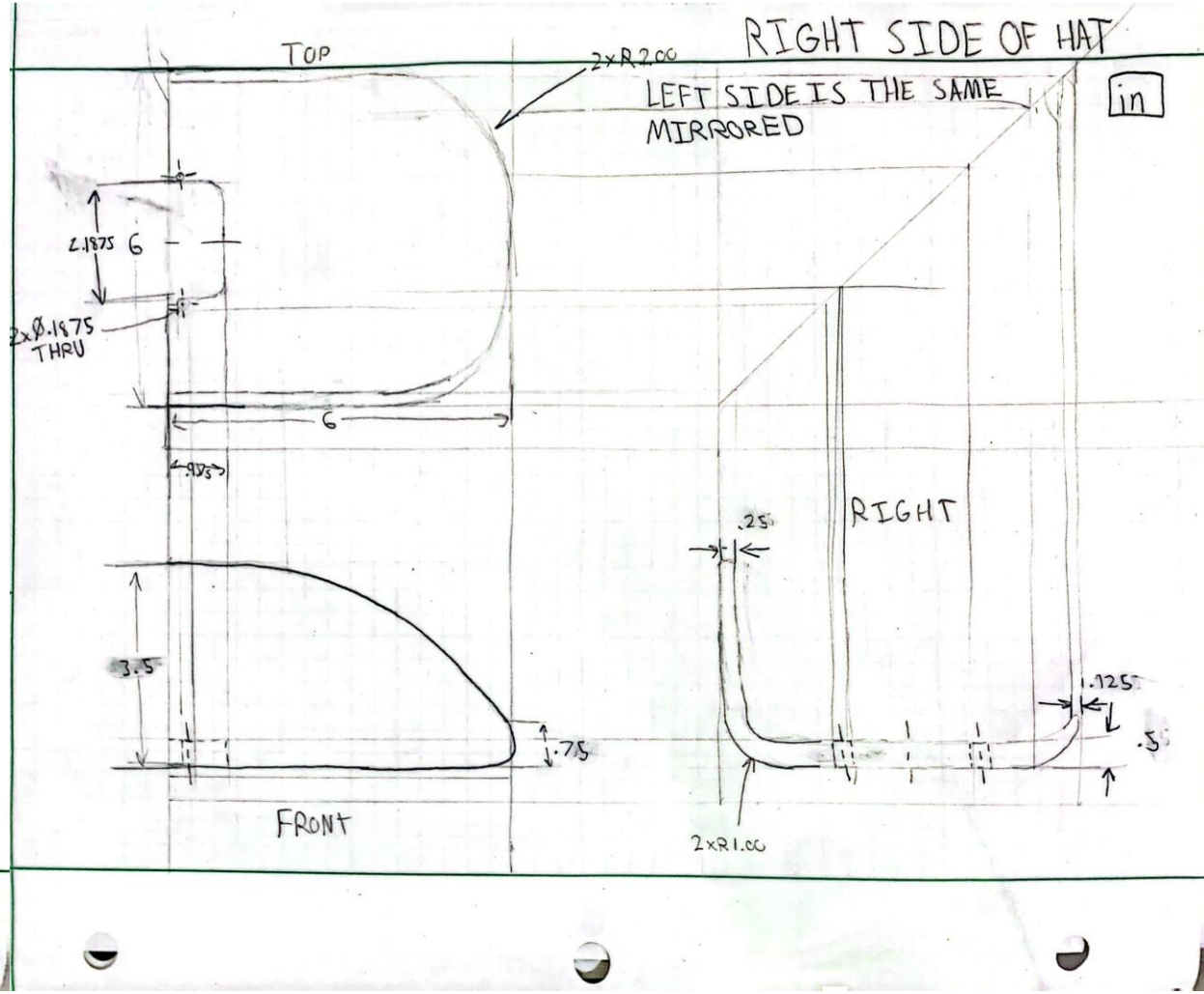

TOP PART OF SKULL

in

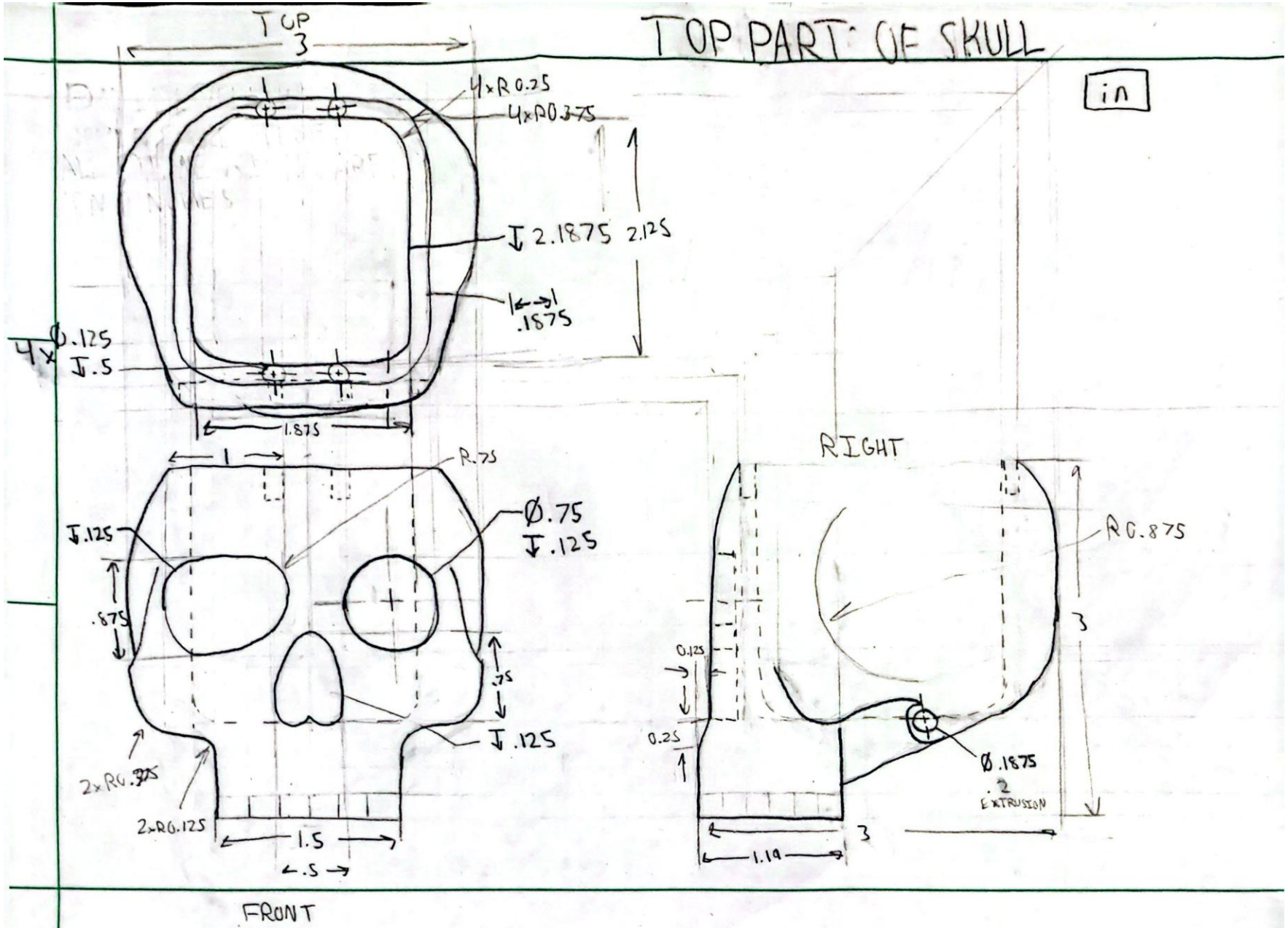
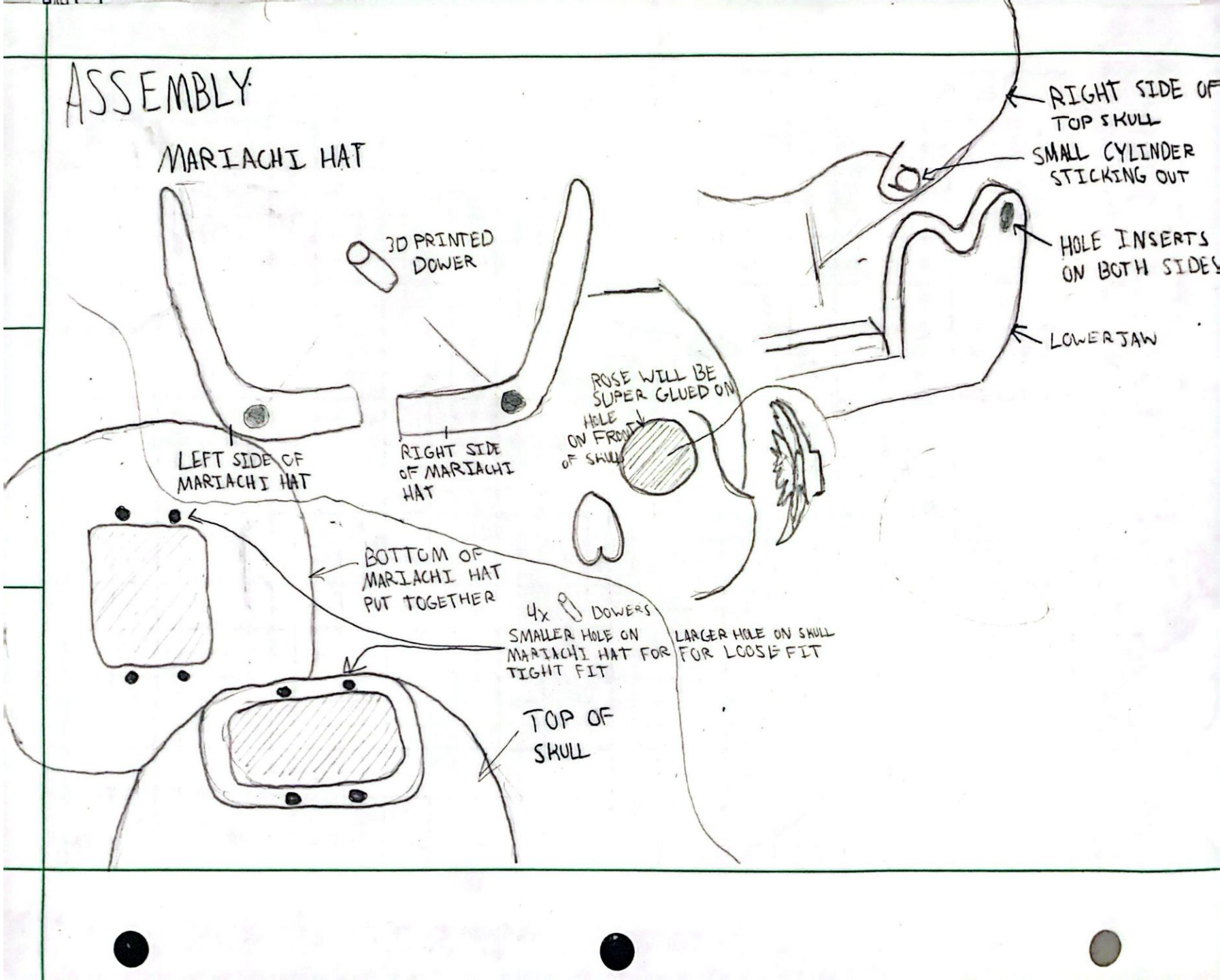
Assembly Sketches